Table of Contents for Heavy duty Steel blade

Arctic Heavy Duty Steel Blade 96", 102” (Blade, Quadrant, A-frame).....2
Shock Absorber Mounting Kit for Arctic Heavy Duty Steel Blade.....6
Arctic Heavy Duty Steel Blade, Quadrant & A-frame Installation.....9

Important note:
Lift frames for this specific blade are listed below:

QL -MKB
QUIK*LINK ® II-MKB
QUIK*LINK ® II-HI
QUIK*LINK ® II-HI-DLC
QUIK*LINK ® III-MKB
QUIK*LINK ® III-MKB-M3493
QUIK*LINK ® III-HI
QUIK*LINK ® III-HI-DLC

For more information about the lift frame, check under Lift frame section

QUIK*LINK is a trademark of Arctic Equipment Manufacturing Corporation

Arctic HD-S

Arctic Heavy Duty Steel Blade, 96"&102" (Blade, Quadrant & A-frame)

ARCTIC HD-S
ARCTIC HEAVY DUTY STEEL BLADE 96", 102"
(BLADE, A-FRAME & QUADRANT)

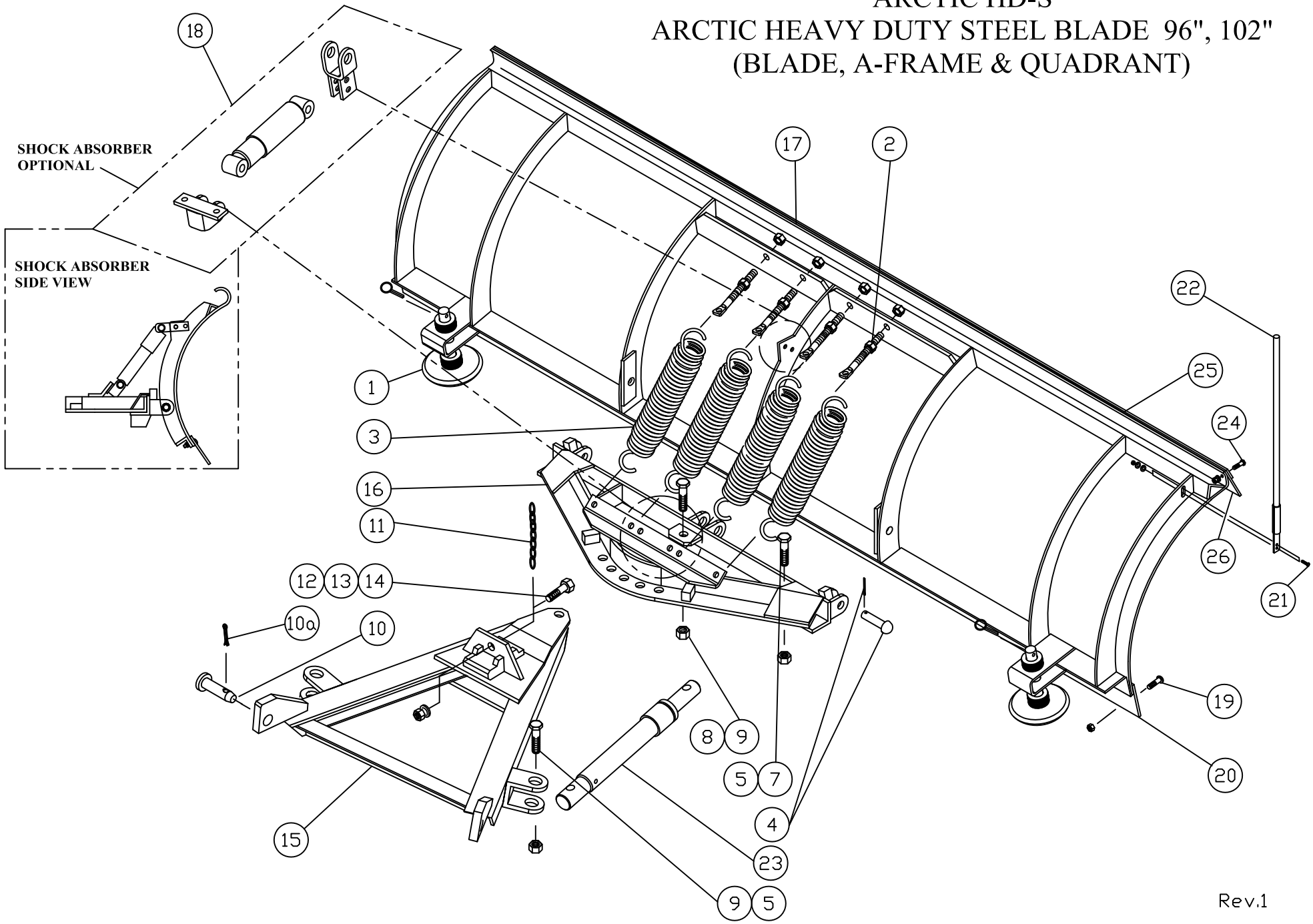

Arctic Heavy Duty Steel Blade 96”&102``(Blade, Quadrant & A-frame) Galvanized			
Item	**Part Number**	**Description**	**Quantity**
1	50037-B-GA	Shoe Assembly Galvanized	2
1a	50040-A	Quick Release Pin	1
1b	55017-N	Shoe Washers	21
1c	50666-B-GA	Shoe Galvanized	1
2	50191-A	Eye-bolt Assembly	4
3	50180-C	Trip Spring	4
4	50232-M	3/4" x 3" Rivet Assembly	3
5	HH-00973-007	3/4" Hex Nut Nylon Insert Thin Locknut	4
7	HH-00972-153	3/4" x 3.5" UNF Cap screw	2
8	HH-00540-006	¾” – 16 Nylon Insert Locknut	1
9	HH-00972-152	3/4" x 3.1/4" UNF Cap screw	3
10	53325-A	Spreader Pin	2
10a	HH-00020-164	Cotter pin	2
11	55018-02-M	Lift Chain - Quik Link	1
	55018-M	Lift Chain - Standard	
12	HH-00972-090	½" x 1½" UNF Cap screw	1
13	HH-00457-001	½" Lock washer	1
14	HH-00460-002	½" UNF Hex nut	1
15	50656-D-GA	32" A-Frame Galvanized	1
16	52347-M-GA	Quadrant Galvanized	1
17	53467-M-GA	Blade Assembly - 90"(includes cutting edge, shoes, deflector) Galvanized	1
	52343-M-GA	Blade Assembly - 96"(includes cutting edge, shoes, deflector) Galvanized	

Arctic Heavy Duty Steel Blade 96”&102``(Blade, Quadrant & A-frame) Galvanized			
Item	**Part Number**	**Description**	**Quantity**
	52344-M-GA	Blade Assembly - 102" (includes cutting edge, shoes, deflector) Galvanized	
	53468-M-GA	Blade Assembly - 108" (includes cutting edge, shoes, deflector) Galvanized	
18*	52298-M-GA	Shock Absorber Assembly Galvanized	1
19	52593-M	Cutting Edge Bolts (96",102") (Carriage Bolt HH-00971-137G8 & Hug Nut HH-00340-003)	8
20	50035-N	Cutting Edge - 90"	1
	50036-N	Cutting Edge - 96"	
	50030-B	Cutting Edge - 102"	
	51161-C	Cutting Edge - 108"	
21	GB001	Guide Bolt Ass’y	4
22	50999-B	Blade Guide	2
23	CS150-10.00-NRS	1 ½ x 10 angling cylinder	2
24	52288-M	Deflector Bolt Kit 90”/96"/102"	1
	52289-M	Deflector Bolt Kit 108"	
25	52239-M-GA	Deflector Strap 90"	1
	52240-M-GA	Deflector Strap 96"	
	52241-M-GA	Deflector Strap 102"	
	52279-M-GA	Deflector Strap 108”	
26	52245-M	Deflector – 90”	1
	52246-M	Deflector - 96"	
	52247-M	Deflector - 102"	
	52280-M	Deflector – 108”	

*See shock absorber installation sheet 52298-M-GA for shock absorber parts (BOM).

Shock Absorber Mounting Kit for HD-S, HD-P & XHD-P

SHOCK ABSORBER KIT
FOR ARCTIC HEAVY DUTY STEEL BLADE
52298-M

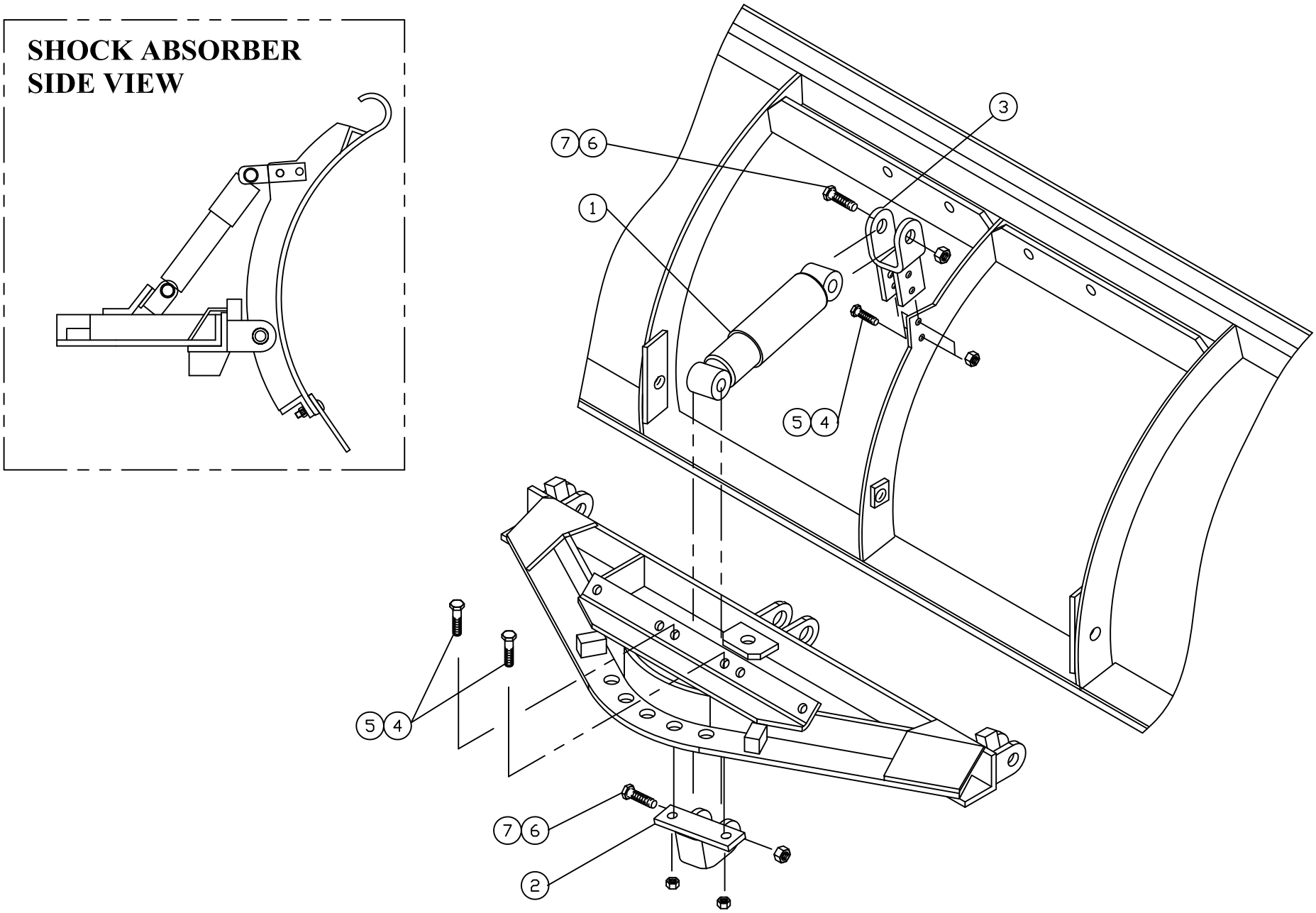

Shock Absorber Mounting Kit 52298-M-GA Galvanized			
Item	**Part Number**	**Description**	**Qty**
1	51984-M	Shock Absorber	1
2	52285-C-GA	Bottom Shock Bracket Galvanized	1
3	52287-B-GA	Upper Shock Bracket Galvanized	1
4	HH-00972-090	½-20 x 1 1/2 Hex Head Cap Bolt	4
5	HH-00540-004	1/2" NC Nut Nylon	4
6	HH-00972-152	3/4-16 x 3 1/4" Hex Head Cap Bolt	2
7	HH-00973-007	3/4-16 Nut Nylon	2

Arctic Heavy Duty Steel Blade, Quadrant & A-frame Installation

ARCTIC STANDARD STEEL BLADE, A-FRAME & QUADRANT INSTALLATION

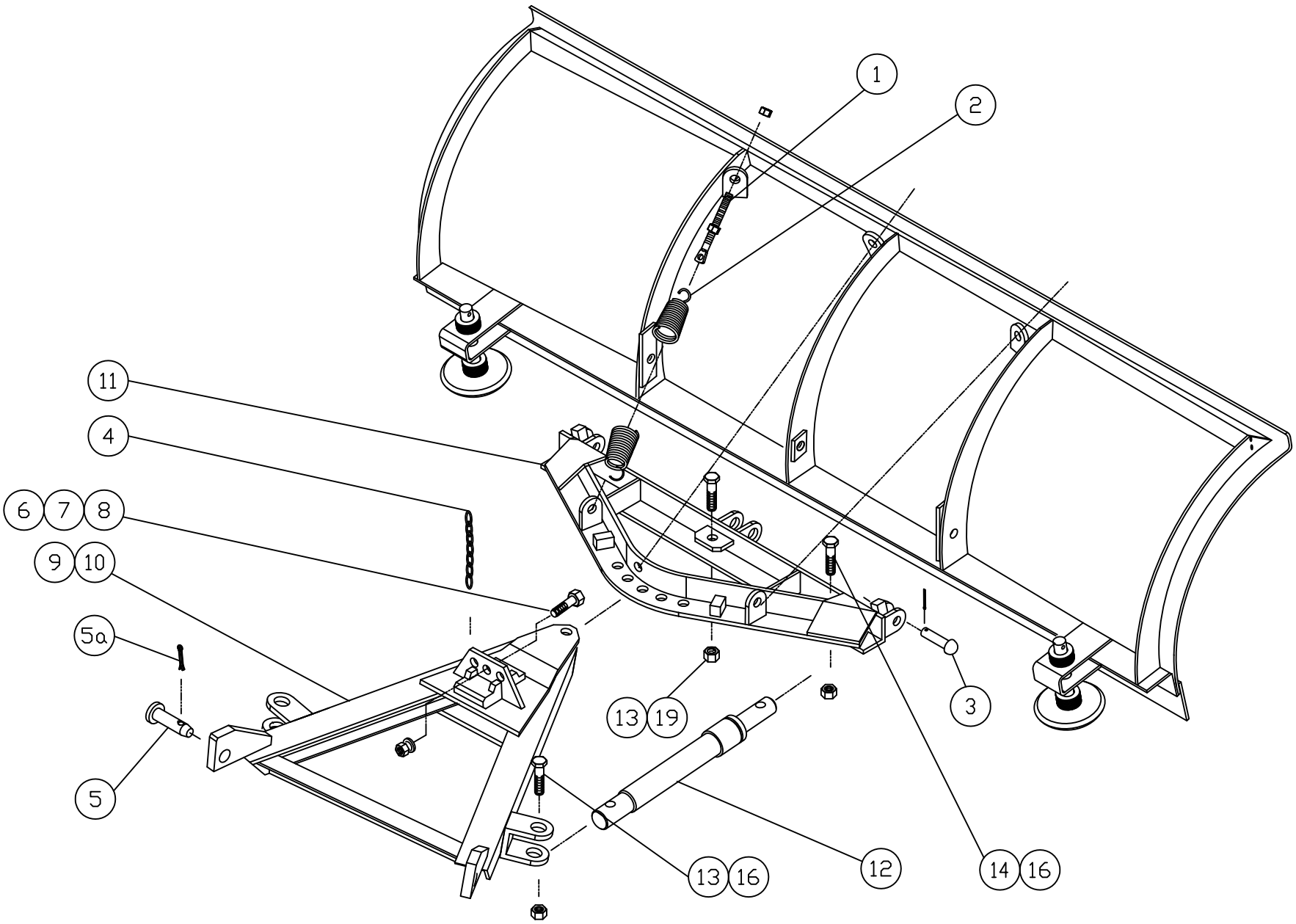

Rev.1

Warning

Do not exceed GVWR or GAWR, including blade and ballast.The rating label is found on the driver side vehicle door corners.

ARCTIC HEAVY DUTY STEEL BLADE (96", 102")
A-FRAME & QUADRANT

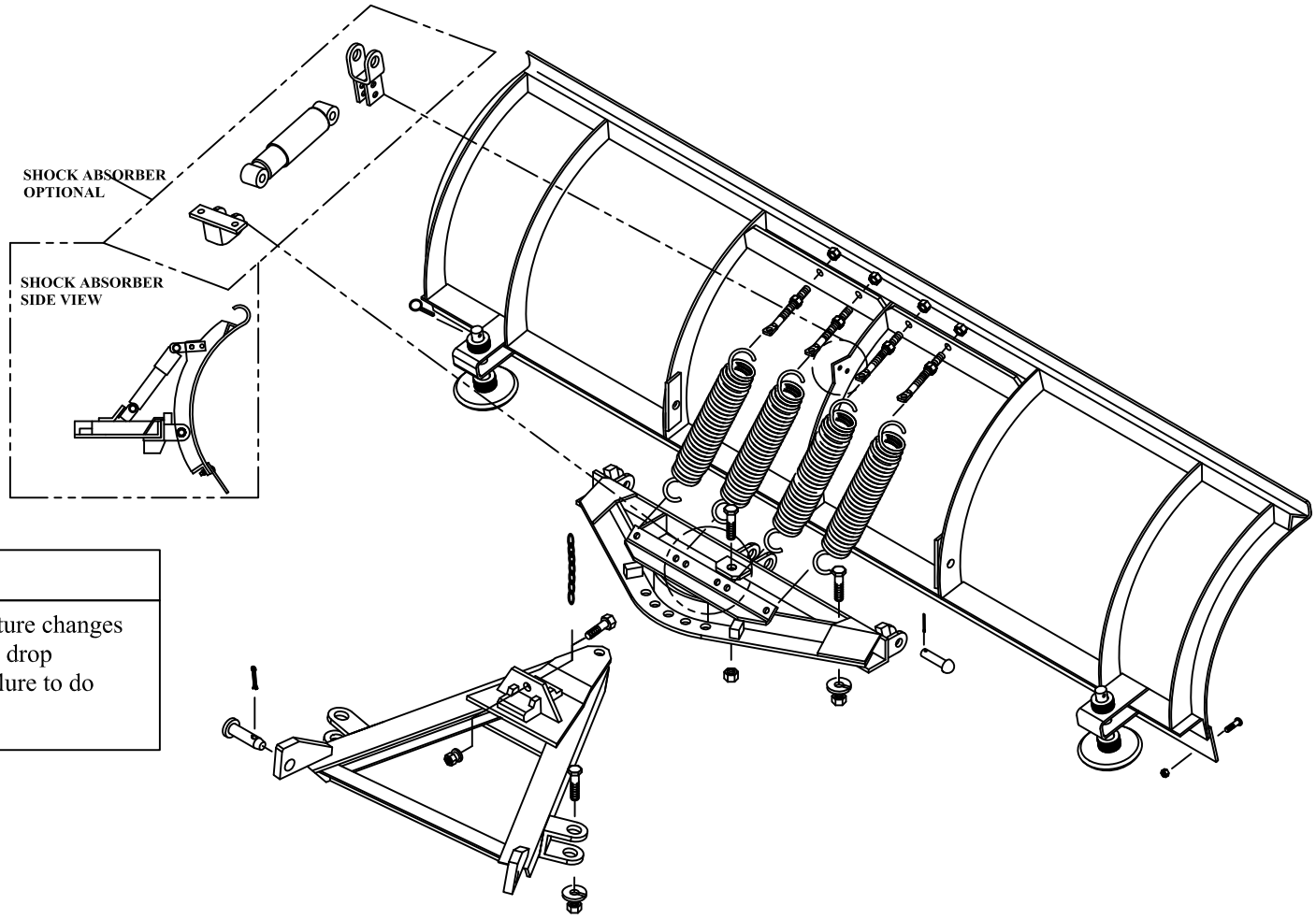

Warning

Lower the blade when the vehicle is parked. Temperature changes could change hydraulic pressure, causing the blade to drop unexpectedly or damaging hydraulic components. Failure to do this can result in serious personal injury.

Warning

Inspect snowplow components and bolts for wear and damage when mounting or removing snowplow and before traveling.

Warning

Keep hands and feet clear of the blade, A-frame and cylinders when mounting or removing the snowplow. Moving or falling assemblies could cause personal injury. Never use a finger to check an alignment. Moving or falling assemblies could crush your finger.

Warning

Do not stand between the vehicle and the blade or within 10' of a moving blade. A moving or falling blade could cause personal injury.

Installation Instructions

1. Lay blade face down on the floor. Attach quadrant (11) to blade by inserting rivets (3) through the holes in the quadrant lugs and blade ribs. Install the centre one first. Secure the rivets with the cotter pins.

2. Take an eye bolt (1) and screw one nut all the way down the thread. Attach spring (2) to the quadrant and the eye bolt, making sure the open end of the spring faces up on the quadrant. Lift the quadrant and insert the eye bolt through the corresponding hole in the spring plate. Secure the eye bolt with another nut. This will hold the quadrant in an upward position, and ease installation of the remaining three springs and eye bolts.

3. Tighten the eye bolt upper nut until the spring coils just break loose from each other. Secure eye bolts in position by tightening the lower nut against the blade spring plate.

4. Lift chain (4) is attached by inserting a ½" bolt (6) through the last link and in the hole in the A-frame lifting bar. Tighten a ½" nut (7) and lock washer (8) firmly from the face side of the lifting bar.

To attach snowplow to vehicle mount, proceed as follows:

1. Position the vehicle such that the A-frame lugs and vehicle mount are in vertical alignment.

2. Hook the chain into the lift channel slot.

3. Actuate lift cylinder slowly. Blade will remain on the ground, but the A-frame will begin to rise. Continue until the A-frame lug holes align with the holes on the vehicle mount.

4. Insert the spreader pins (5) through the holes to attach the A-frame to the vehicle mount. Secure attachment by inserting cotter pins (5a) into the spreader pins.

5. With the control switch in the DOWN position, push the lift channel downward as far as possible and adjust the chain so there are two links of slack.

6. Check the cutting edge clearance. Use a combination of spacer washers until ½" clearance between the ground and cutting edge is achieved. Secure shoes by inserting the lynch pins into the shoe.

*Power Angling Assembly 52345-M & 52346-M comes assembled from Arctic Equipment.

Arctic Heavy Duty Steel Blade, Quadrant and A frame Galvanized						
Item	Part Number	Description	Quantity			
			Hardware Kit 52275-01-M	Hardware Kit 52275-02-M	*Power Angling Assembly 52345-M	*Power Angling Assembly 52346-M-GA
1	50191-M	Eye Bolt ass’y (eye bolt 2 5/8" hex nuts)	4			
2	50180-C	Trip Spring	4			
3	50232-M	3/4"X3" Rivet ass’y (includes cotter pin)	3			
4	55018-M	Chain	1			
	55018-02-M	Chain Quik Link		1		
5	53325-A	Spreader Bar Pin	2			
5a	HH-00020-164	Cotter pin	2			
6	HH-00972-090	½-20 x 1.1/2 Hex Head Cap Screw	1			
7	HH-00460-002	½-20 Hex Nut	1			
8	HH-00457-001	½ Lock washer	1			
9	50656-D-GA	32" A-Frame Galvanized				1
10	50730-D-GA	28" A-Frame Galvanized			1	
11	52347-M-GA	Quadrant Galvanized			1	
12	CS150-10.00-NRS	Angle Cylinder 1 ½" x 10"			2	
13	HH-00972-152	3/4-16x3.1/4 Hex Head Cap Screw			2	

Arctic Heavy Duty Steel Blade, Quadrant and A frame Galvanized						
Item	Part Number	Description	Quantity			
			Hardware Kit 52275-01-M	Hardware Kit 52275-02-M	*Power Angling Assembly 52345-M	*Power Angling Assembly 52346-M-GA
14	HH-00972-153	3/4-16x 3.1/2"Hex Head Cap Screw			2	
16	HH-00973-007	3/4-16 Hex Nut Nylon Insert			4	
17	HH-00005-008	3/4-16 Castle Nut			1	
18	HH-00020-087	1/8Dx2L Cotter Pin			1	
19	51188-A	3/4"x2.1/2" Hinge Bolt			1	

*Power Angling Assembly 52345-M & 52346-M-GA comes assembled from Arctic Equipment.